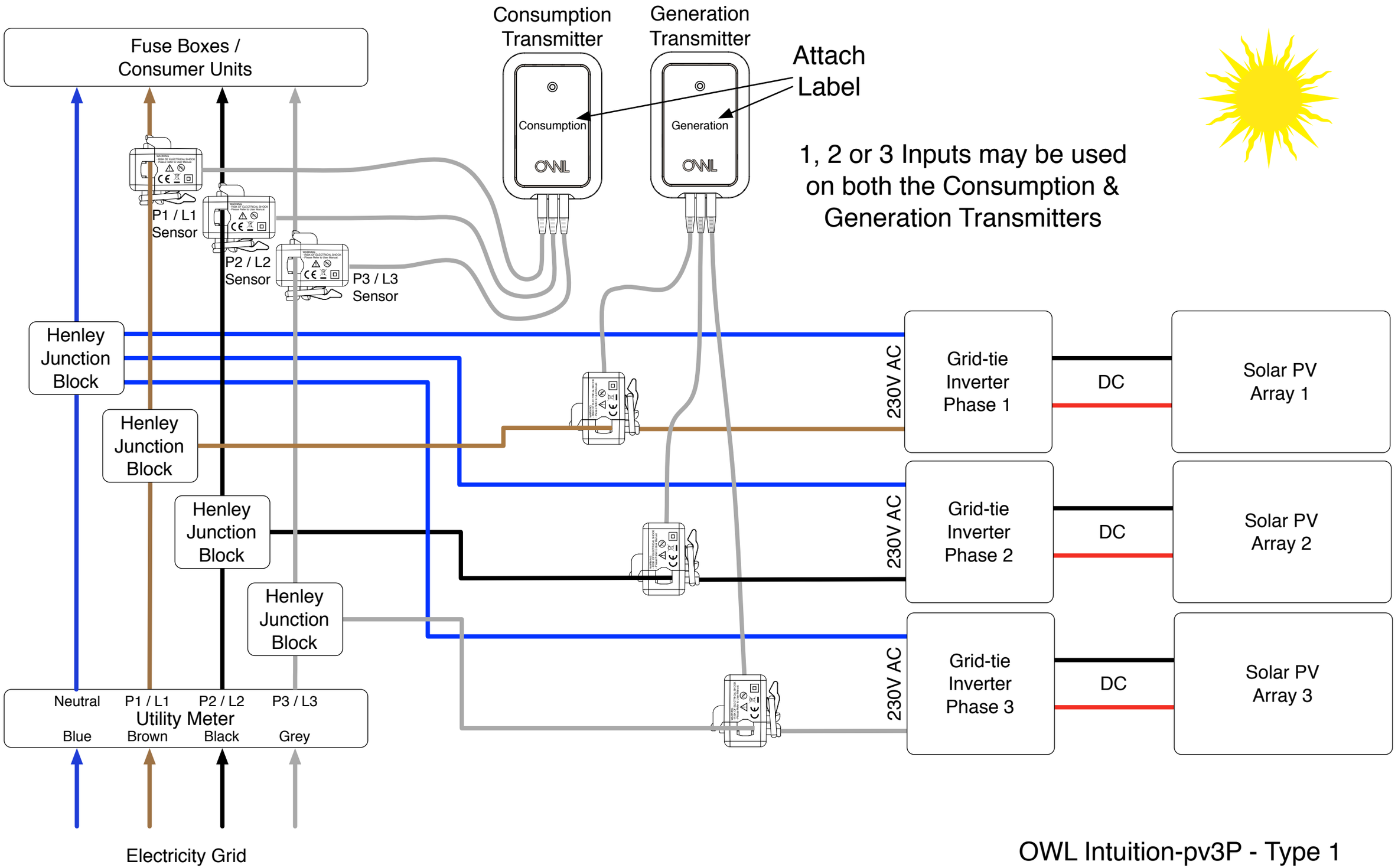

OWL Intuition-pv3P - Type 1